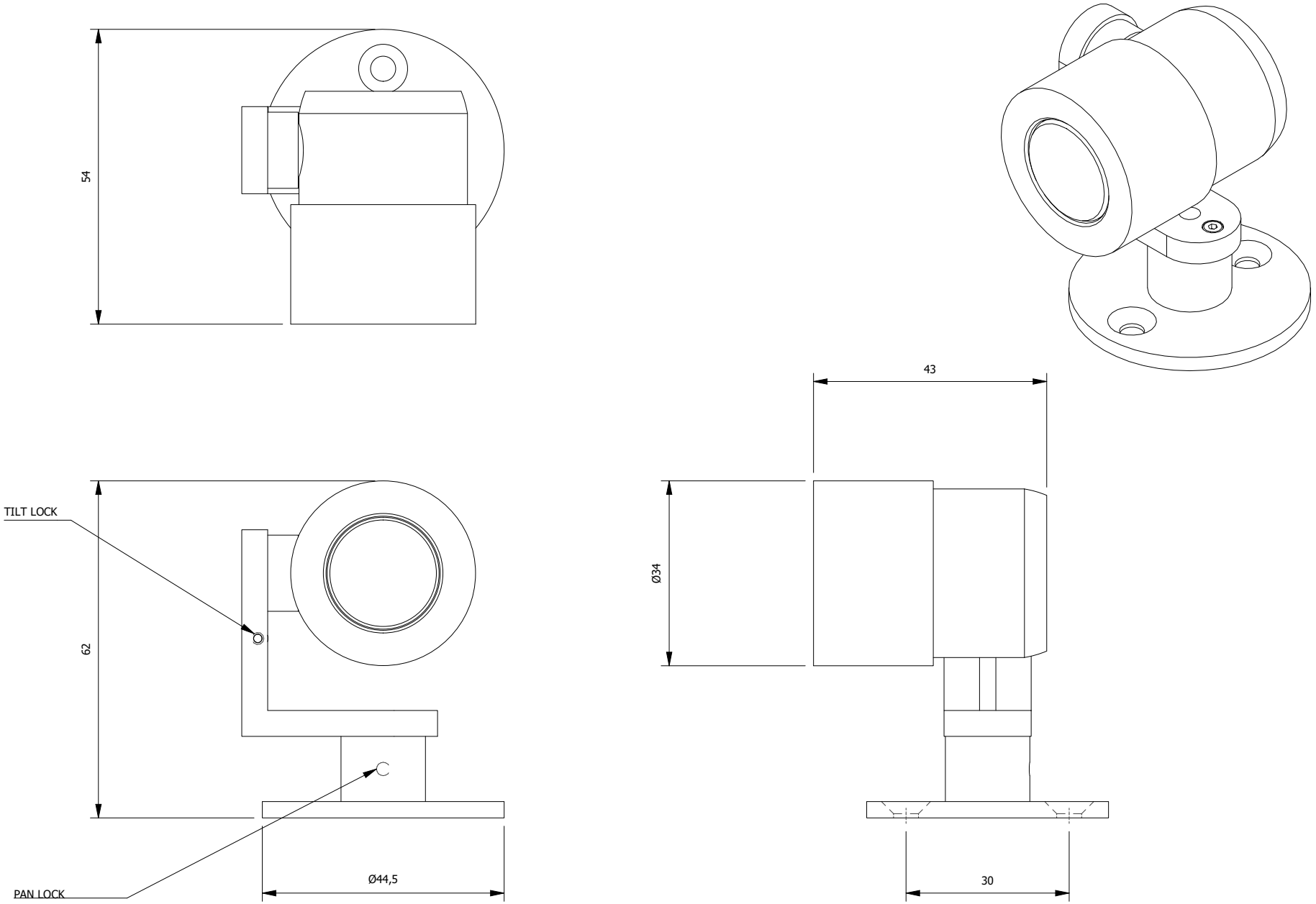

MIKE STOANE LIGHTING LTD,
20 DRYDEN RD,
BILSTON GLEN IND. EST.
LOANHEAD, EH20 9LZ
TEL: 0131 440 1313, FAX 0131 440 0049
sales@mikestoanelighting.com

STOANE LIGHTING

THIS DRAWING / DESIGN IS THE PROPERTY OF MIKE STOANE LIGHTING AND SUBJECT TO COPYRIGHT / DESIGN RIGHTS. DISCLOSURE OR COPYING IS NOT PERMITTED WITHOUT PRIOR WRITTEN PERMISSION FROM MIKE STOANE LIGHTING. THIS COPY MUST BE RETURNED UPON DEMAND © MSL