STX2.70

STOANE LIGHTING

EQUIPMENT DESIGN + MANUFACTURE

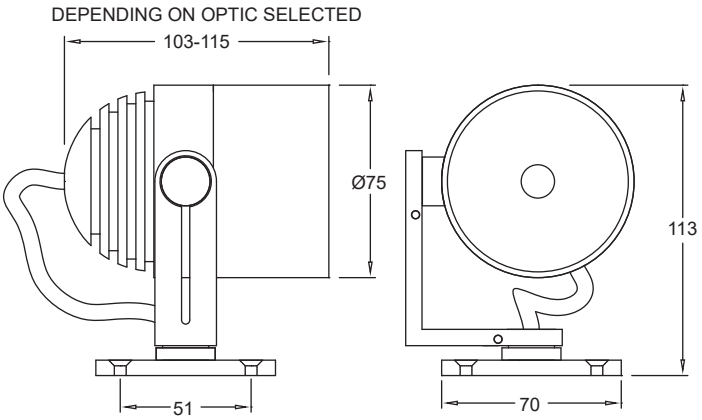

Order Code	STX2.70.module.beam.finish
Example	*STX2.70.3000K,2700m XTM 19mm LES.medium.RAL9010*

Materials:	Aluminium
Light source:	Xicato XTM 19mm LES LED Module
Output:	Find compatible modules and photometry data on the product page on our website
CRI Ra:	≥80 or ≥95 Artist
Finish:	Anodised or painted to any RAL colour
Dimming:	10V, DMX, DALI, Mains or Wireless
Supply:	Constant current remote driver
Locking:	2.5mm allen key required
Available Tilt:	± 90º
Weight:	0.65kg
Description:	Surface mount lockable power LED spotlight using Xicato module.
Accessories:	Find photometry data on the product page on our website. Barn door, wall washing attachments and zoom lens are also available. Takes two accessories.