ADL CP X.pdf 1 13/01/2020 13:24:36

STOANE LIGHTING

EQUIPMENT DESIGN + MANUFACTURE

ADL.CP.X

Installation and Maintenance Instructions

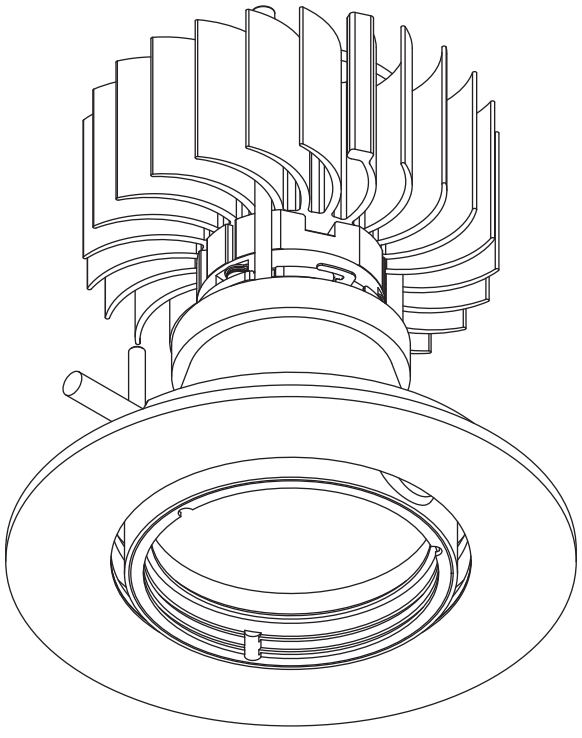

IMPORTANT: All wiring connections must be made before switching on mains power.

- Xicato LED Module
- Not suitable for covering with thermally insulating material
- This product should not be disposed of in your general waste
- Please retain these instructions for future reference
- Class III - Extra Low Voltage
- **IP20** Indoor Use Only
- European Conformity

Mike Stoane Lighting Ltd
20 Dryden Road Bilston Glen Ind Est.
Loanhead Midlothian EH20 9LZ UK

T: +44 (0) 131 440 1313
F: +44 (0) 131 440 0049
sales@mikestoanelighting.com

www.mikestoanelighting.com
VAT No GB682885284
Limited Company 188910

Electrical Supply

Installation must be carried out by a qualified electrician in accordance with BS 7671:2008 Wiring Regulations. 230/240V AC 50/60Hz mains supply to a suitable SELV LED Driver.

Site conditions: LED equipment is more susceptible to static damage and over voltage than previous technology. Before handling or connecting to the mains supply ensure that all MSL products are protected from static discharge and that the mains supply is to regulation. (230V +10 -6%)

This fitting is supplied with a Xicato LED module. Refer to the fitting label for the module version and wattage. More information on the module can be found at www.xicato.com/support

Mains cables must be double insulated, strain relieved and separated from E.L.V output cables.

If using the Xicato XTM Module;
This unit requires a constant current driver. 700mA Max.

If using the Xicato XIM Module;
This unit requires a 48V constant voltage driver.

Observe polarity:
Positive (+) is marked as RED.
Incorrect supply or reverse polarity can cause irreparable damage.

All connections must be made before switching on mains. If the supply is energised prior to making the connections to the fitting then the resulting surge will damage the LED.

All lighting equipment is delicate and easily damaged through misuse or inappropriate installation (mechanical or electrical). Repairs and replacements may cause delays and will be chargeable. Contact MSL for support if required. For full warranty terms & conditions please visit our website.

The light source contained in this luminaire shall only be replaced by the manufacturer or his service agent or a similar qualified person.

The entire dimming control circuit source must be of SELV insulation class.

Caution - This product contains magnets. Magnets are dangerous if ingested, can affect pacemakers and other magnetically sensitive equipment.

Cables must be routed away from hot parts of luminaires especially out of sight in ceiling cavities.

Installation

Check that the mounting surface is suitable for the installation of this fitting. Fitting Weight : 1kg.

A 112mm diameter hole is required for mounting.

Step 1 Cut 112mm diameter hole in the mounting surface.

Step 2 Make mains connections to SELV LED driver and extra low voltage connections to the fitting.

Step 3 Push the fitting into the mounting hole and tighten the installation screws using a 2.5mm Allen key until the fitting is securely retained in the hole.

Step 4 After focus adjustment, lock the pan and tilt using a 3 mm Allen key.

Step 5 Twist on the cover plate to hide adjustment fixings. See lens fitting/replacement page.

Ensure that the installation of this fitting does not compromise any fire barrier offered by your ceiling. Intumescent downlighter fire hoods should be used to maintain the integrity of the barrier in the event of a fire.

Do not cover the luminaire with insulation. Heat sinks and fan assisted lamps must be kept free from dust and well ventilated to ensure long term reliability and light quality.

WARNING: Do not look at exposed LED lamps in operation. Eye injury can result.

Cleaning:

Fully isolate the fitting and allow to cool.

Clean the fitting with a slightly damp lint free cloth from a mild solution of soap and water. The fitting must be completely dry before reconnecting power.

Incompatible or abrasive chemicals can damage the fitting, contact MSL for advice if required.

STOANE LIGHTING

EQUIPMENT DESIGN + MANUFACTURE

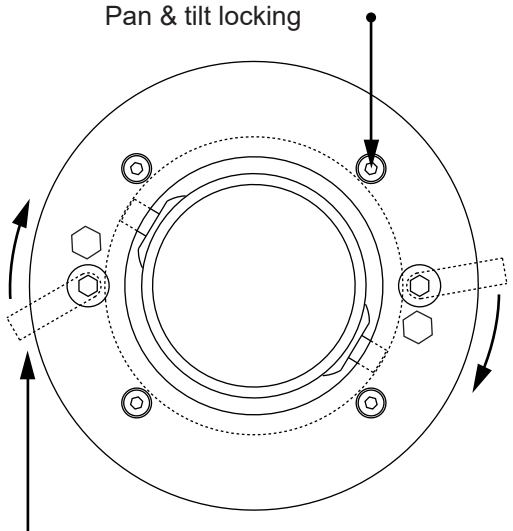

Tightening the installation screws will swing out the tabs which clamp ceiling surface from behind, retaining the fitting.

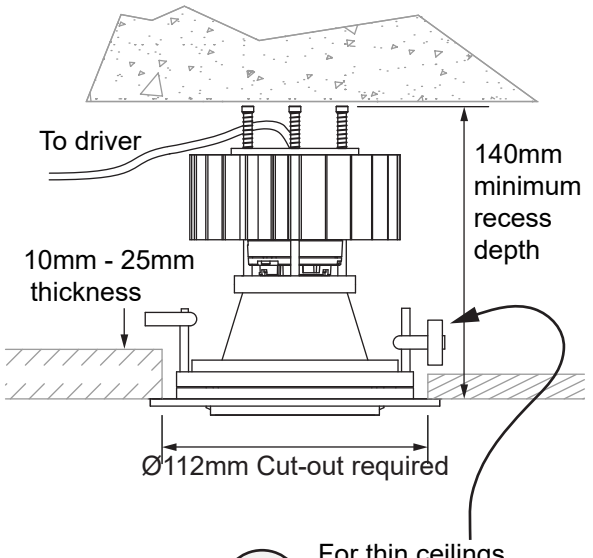

For thin ceilings spacers can be provided which are to be pushed on to the ceiling clamps.

STOANE LIGHTING

EQUIPMENT DESIGN + MANUFACTURE

LENS FITTING/REPLACEMENT

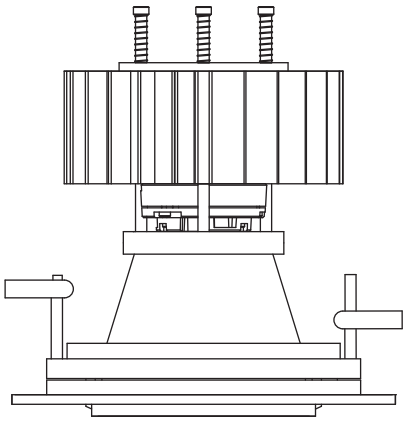

Engage retaining ring tool into slots on ring and turn to remove or tighten.

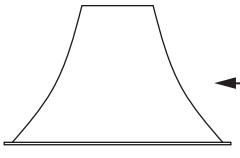

Reflector

Reflector retaining ring

Circlip groves are provided to retain accessories

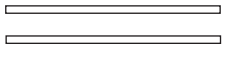

Space for 2 accessories

Circlip

Reflector retaining ring tool (see image)

To Fit the Cover Plate

Centrally locate the cover plate onto the bezel aligning the slot with the flats on the ADL bezel.
Rotate 90º clockwise to secure.

To Remove the Cover Plate
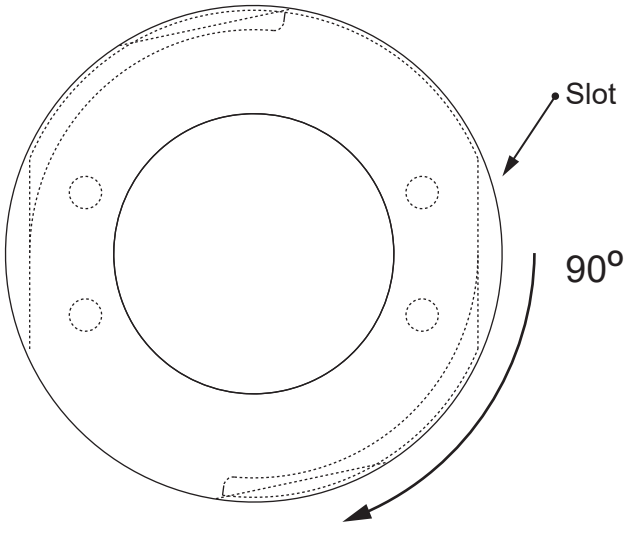
Rotate 90º
Use a screwdriver or similar in the slot to prise off the plate (use caution, do not damage the paint)